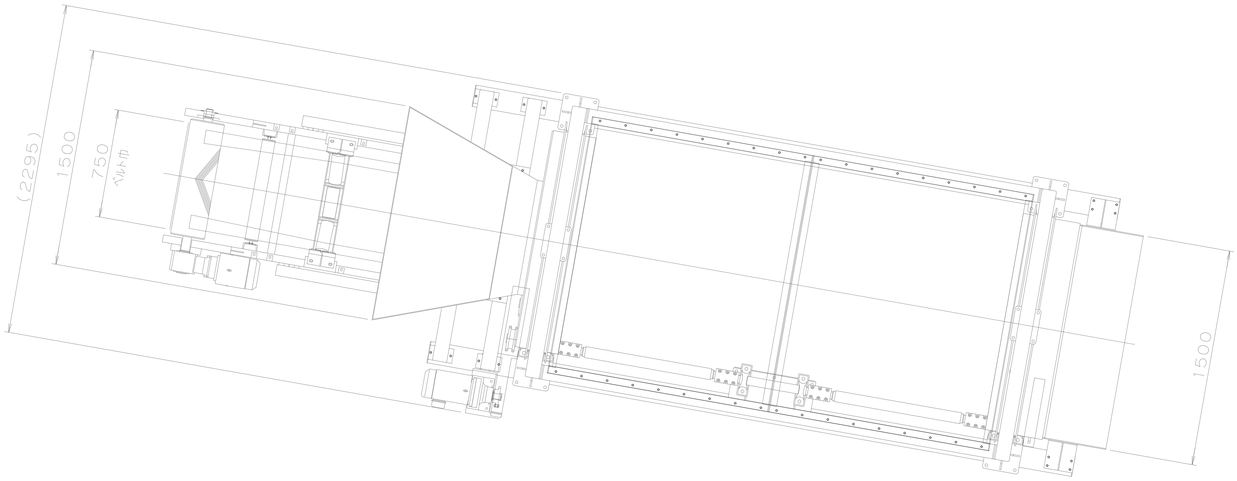
(2295)
1500
750
1500

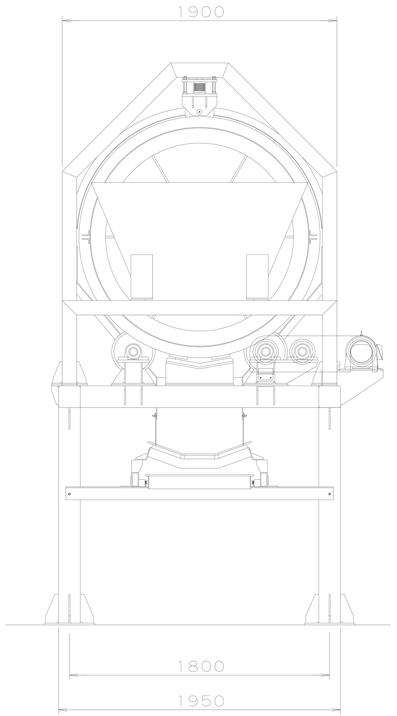
1900
1800
1950

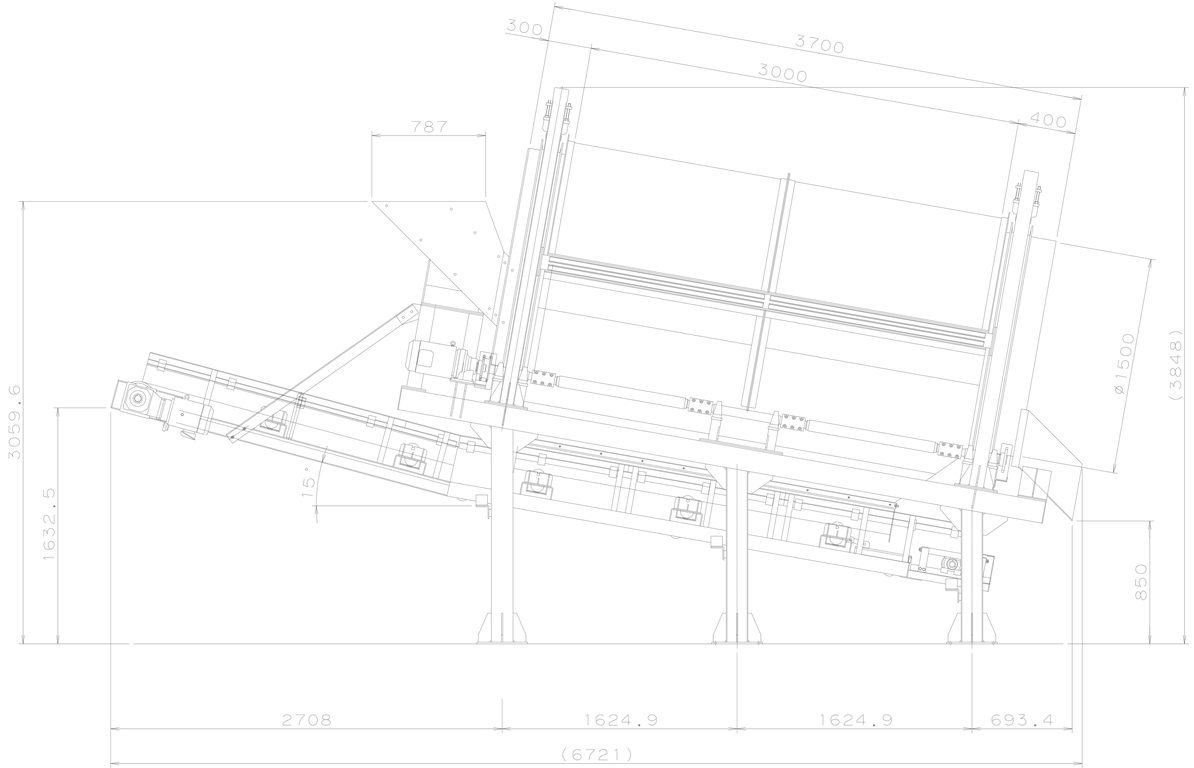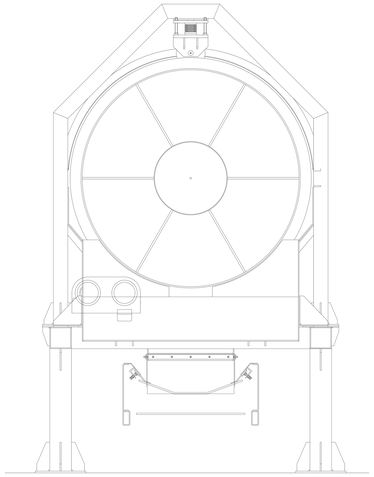
300
3700
3000
400
787
ø1500
(3848)
3059.6
1632.5
15°
850
2708
1624.9
1624.9
693.4
(6721)